City of Arlington Council Agenda Bill

Item: WS #6 Attachment F

COUNCIL MEETING DATE:	
November 14, 2016	
SUBJECT:	
Authority to purchase precast concrete restroom/concession facility from State contract.	
ATTACHMENTS:	
Cost worksheet, floorplan, example photos, letter of request for CDBG contingency funds	
DEPARTMENT OF ORIGIN	
Community & Economic Development; Marc Hayes 360-403-3457	
EXPENDITURES REQUESTED:	$63,000.00
BUDGET CATEGORY:	Bars # 594-76-6215
LEGAL REVIEW:	

DESCRIPTION:

CXT Concrete Buildings offers a precast restroom/concession facility that is produced at their facility as modules, shipped to the site and erected, ready to use after utility connections and sidewalk/site restoration elements have been completed. This is basically a "turnkey" facility. CXT is under WA State Department of Enterprise Services (DES) contract, allowing us to purchase from CXT through DES.

The total cost of the building modules is $259,048.49. CDBG monies will fund $196,546.00 of the module cost, with the balance of the cost $62,502 paid with City funds. The building model is the "Denali" as depicted in the attachments.

HISTORY:

The ability to construct a site built restroom at Haller Park, within our budget, in this escalated construction environment has proven elusive. This alternative solution fits our needs for a restroom/concession facility and in reality is actually a better choice than site built in regards to longevity, maintenance and vandalism. The only downside is the deferred construction of the covered Community Activity Shelter, which will occur as funding becomes available.

City of Arlington
Council Agenda Bill

Item:
WS #6
Attachment
F

ALTERNATIVES
There is no other viable alternative since CDBG funds need to be expended by March 2017 or they are forfeited.
RECOMMENDED MOTION:
Workshop only; discussion only. The proposed motion at the November 21, 2016 regular Council Meeting would be "I move to approve the purchase of the "Denali" style precast concrete building from CXT Concrete Buildings for the Haller Park restroom/concession facility".

State of Washington
Contract #00213

CXT Incorporated
3808 North Sullivan Road Bldg. #7
Spokane, WA 99216
Federal Tax ID #91-1498605A

Denali Toilet Building

Cost Work Sheet and Order Form

Complete One Form per Unit Ordered

Site name and Address (or closest cross street) Haller Park 1100 West Ave.

City (or closest town) Arlington WA 98223

Contact Phone number: 360 403-3457 Fax:_____
email address: mhayes@arlingtonwa.gov

Accepted By:_____ Date:_____

Unit Price of Flush Toilet and Placement

Flush toilet with horizontal lap or board & batt upper wall texture, simulated stone lower wall texture, and simulated shake roof, vitreous china fixtures, galvanized painted doors and frames, electrical package, Sacrificial antigrafitti sealer. **$49,920.00**	$49,920.00
One-Way Transportation Cost, (between Spokane, WA and the site) **$3,320.00**	$ 3,320.00

Added Cost Options:

• Final Connection to Utilities - **$2,080.00**	$_____
• Roof Options (Delta Rib or Exposed Aggregate)- **$917.00**	$ 917.00
• Two-Tone Color Scheme - **$255.00**	$ 255.00
• Stainless Steel Fixtures - **$1,733.00 x 3**	$5,199.00
• Electric Hand Dryers - **$2,140.00 x 3**	$6,420.00
• Electronic Flush Valves w/o Urinal - **$968.00 x 3**	$2,904.00
• Electronic Lavatory Faucets - **$968.00 x 3**	$2,904.00
• 30-Gallon Electric Water Heater - **$764.00**	$ 764.00
• Insta-Hot Water Heaters (2) - **$1,029.00**	$_____
• Tile Floors in Restrooms - **$2,548.00**	$_____
• VandlShield XT Sealer - **$2,905.00**	$2,905.00
• Marine Package for Extra Corrosion Resistance - **$3,312.00**	$_____
• Fiberglass Entry and Chase Doors and Frames - **$3,516.00**	$_____
• Magnetic Door Locks (not chase door) - **$3,174.00 x 3**	$9,522.00
• Exterior Mounted ADA Drinking Fountain - **$2,752.00**	$2,752.00
• Haws SK1 Drinking Ftn. Cane Skirt (may be req'd for ADA – CXT recommended) - **$245.00**	$ 245.00
• Skylight (each) - **$434.00**	$_____
• Marine Grade Skylight (each) - **$1,427.00**	$_____
• Exterior Frostproof Hose Bib with Box - **$392.00**	$ 392.00
• Paper Towel Dispenser - **$86.00 EA x 6**	$ 516.00
• Toilet Seat Cover Dispenser - **$76.00 EA x 6**	$ 456.00
• Sanitary Napkin Disposal - **$49.00 EA x 6**	$ 294.00
• CXT Wastebasket - **$38.00 EA x 6**	$ 228.00
• Paint Touch up Kit - Single Color - $**41.00**	$_____
• Paint Touch up Kit - Two Tone Color - **$51.00 x 3**	$ 153.00

***Options Continued on Page 2**

- Optional Restroom Section - $**53,240.00*** x 2** $106,480.00
- Optional Shower Section - $**65,616.00** $_____
  (Includes 80 gallon WH, Shower Fixtures, & 2 Lavs)
- Optional Concession Section - $**60,624.00** $60,624.00
  (Includes Concession Door w/Sliding Window, 3 Compartment Sink, & Vitreous Sink)
- Optional Storage Section - **$48,664.00** $_____

Add: WA Management Fee in the amount of 0.74% of building cost, not including shipping. **$**1,878.49

Total Cost per Unit **$259,048.49**

*****Note: When choosing the optional Restroom Section please double the cost for the restroom options chosen above (if any).**

No Cost Options: Mark with "X": *For Two Tone color- R=Roof, W=Exterior Walls*

___Sage Green***	___Amber Rose	___Liberty Tan	___Berry Mauve
___Toasted Almond	___Oatmeal Buff	___Buckskin	___Rosewood
___Sun Bronze	___Golden Beige	___Mocha Carmel	___Malibu Taupe
___Sand Beige	___Natural Honey	___Salsa Red	___Java Brown
___Pueblo Gold	___Cappuccino Cream	___Coca Milk	___Raven Black
___Granite Rock	___Georgia Brick	___Western Wheat	___Nuss Brown
___Rich Earth	___Charcoal Grey		

***Signage:**
___ Men
___ Women
_X_ Unisex

Roof:	**Top Section of Building:**	**Bottom Section of Building:**
___Cedar Shake	_X_Board and Batt	___Round River Rock
_X_Delta Rib	___Horizontal Lap	___ Napa Valley Stone
		___ Flag Stone
		_X_Horizontal Lap

Rock Color Selection:
__ Basalt ___ Mtn Blend ___Natural Grey ____ Romana

**Building includes "Restroom" sign(s) in braille & roman letters.

State Contract Specialist: John Allen @ 360-407-8406
CXT Territory Salesman: Eric Kuester @ 509-994-9900
CXT Inside Sales Manager: Ali Cairns @ 509-892-3238

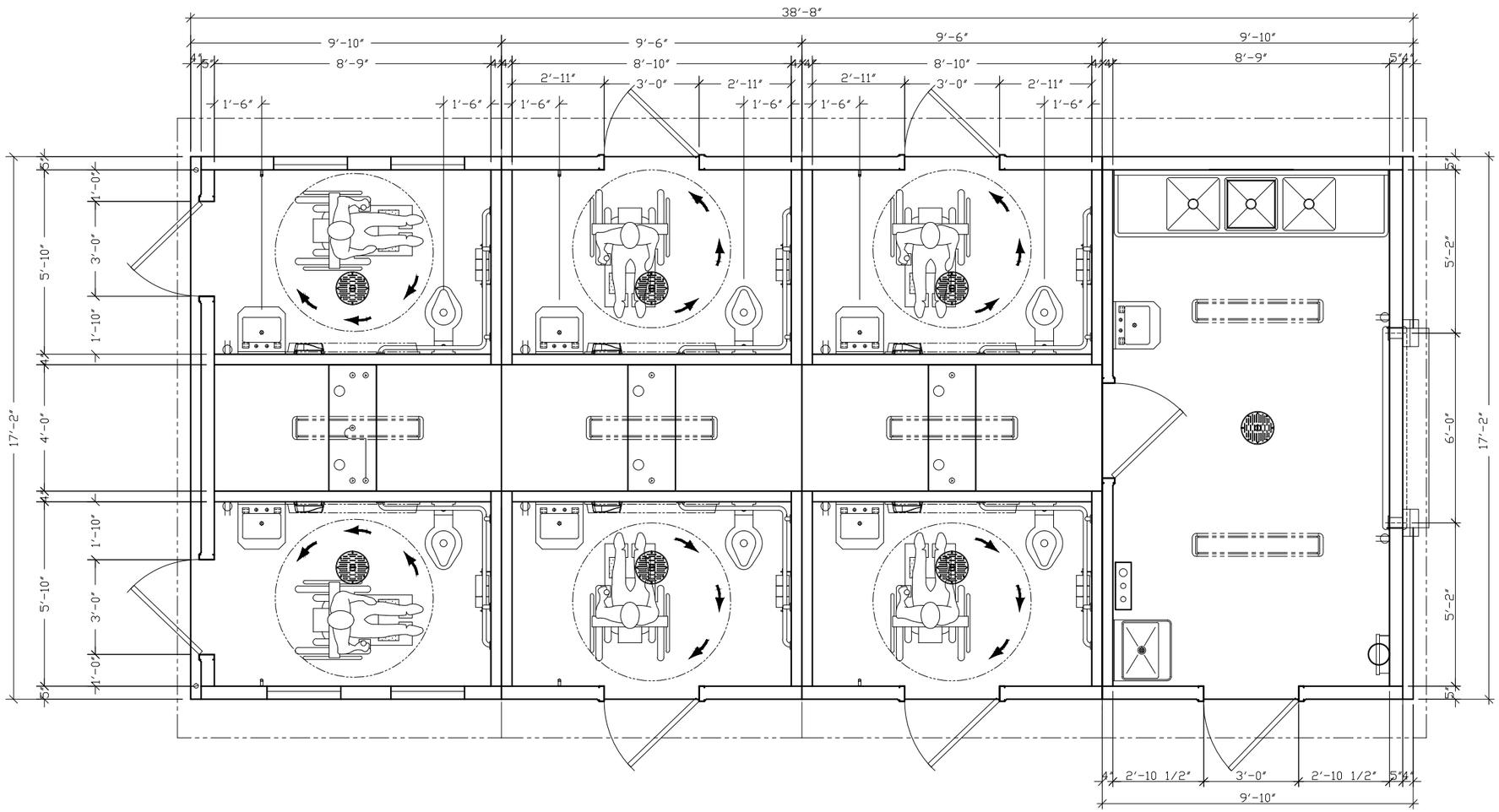

3808 N. Sullivan Bldg. #7 Spokane, WA 99216

CXT Precast Products

901 N. Highway 77 Hillsboro, TX 76645

PROJECT TITLE

DENALI SECTIONAL

PROPOSAL NUMBER 16-375P

NOTICE

The information contained herein is proprietary and the exclusive property of CXT Incorporated. The information may only be used by the original recipient for the purpose intended. Reproduction or distribution of this information is strictly prohibited without the prior written consent of CXT Incorporated. By allowing use of this information, CXT Incorporated grants no warranty, express or implied, including a warranty of merchantability or of fitness for a particular purpose.

CXT Incorporated

REV.	DESCRIPTION	APPROVAL	DATE

SCALE	1/4"=1'-0"	DATE	10-31-16
DRAWN	ROB D WALKER	FILE NO.	16-375P
CHECKED	RDW	PLOT	48

FLOOR PLAN

DWG NO.	SHEET	REV.
DNS-03	3	

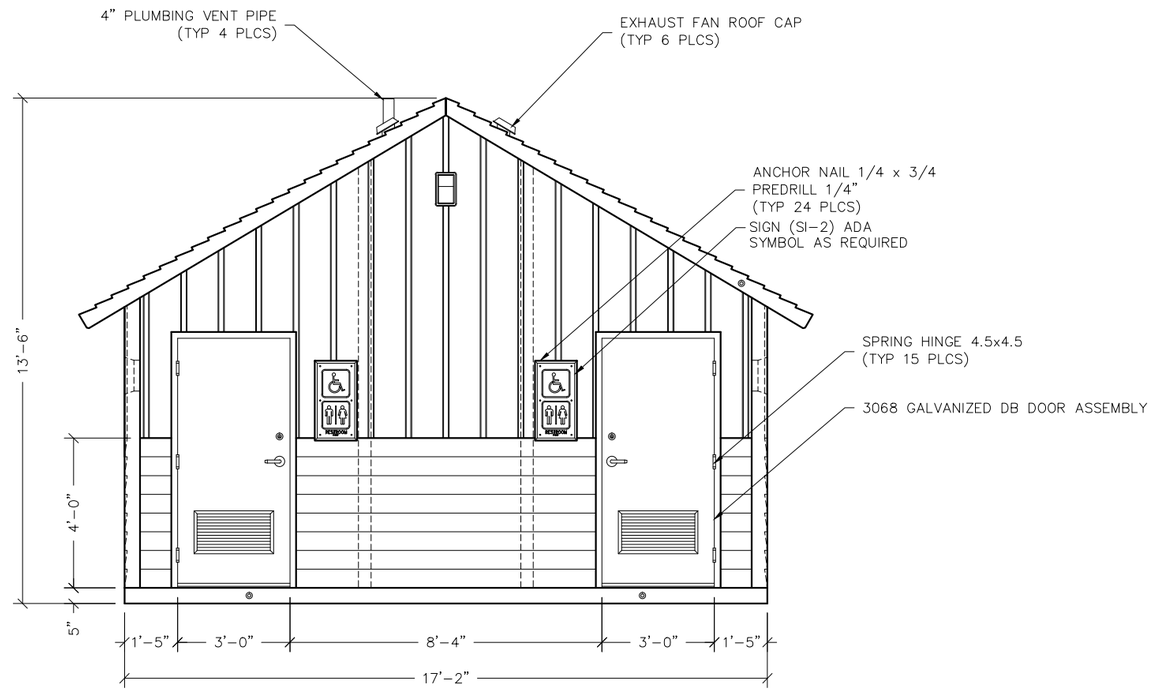

FRONT ELEVATION

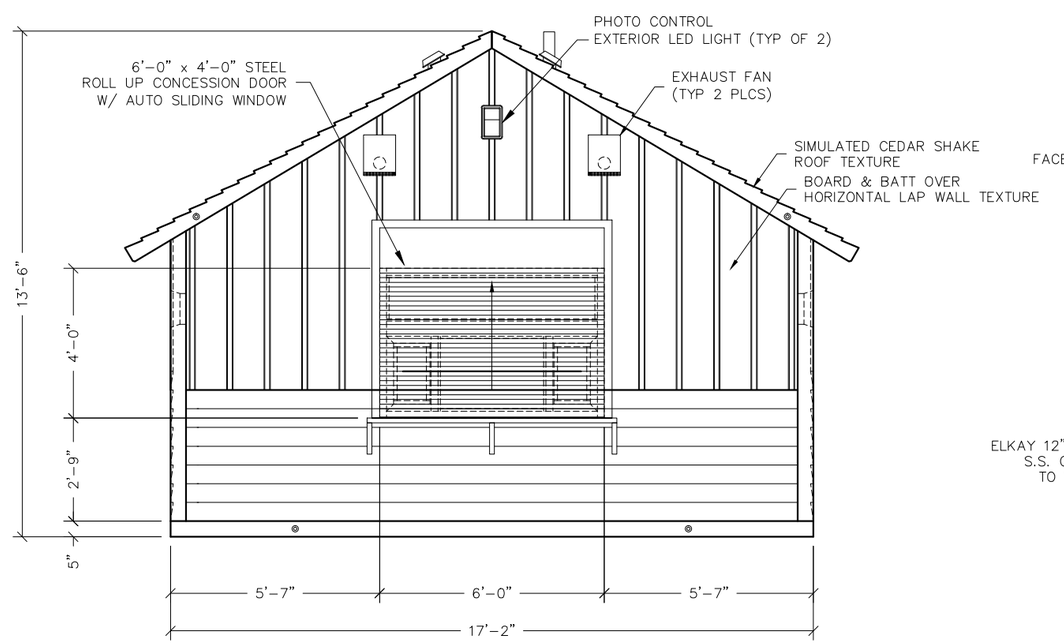

REAR ELEVATION

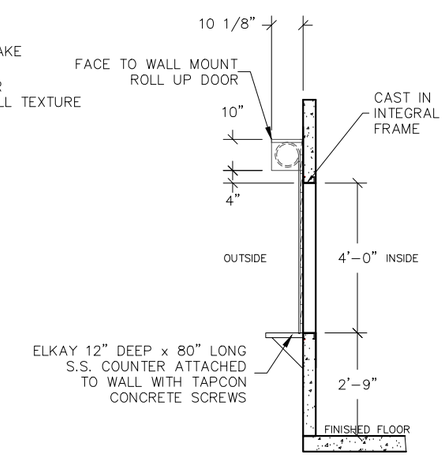

EXTERIOR ROLL UP DOOR DETAIL

EMBEDDED MATERIALS	
ITEM	QTY
3068 DOOR ASSEMBLY	8
SPRING HINGE 4.5x4.5	24
ADA SI-2-U	6
ROLL UP DOOR ASSEMBLY	1

CU. FT. CONC.	SQ. FT. W.W.F.
APPROXIMATE WEIGHT	

3808 N. Sullivan Bldg. #7 Spokane, WA 99216

CXT Precast Products

901 N. Highway 77 Hillsboro, TX 76645

PROJECT TITLE

DENALI SECTIONAL

PROPOSAL NUMBER 16-376P

NOTICE

The information contained herein is proprietary and the exclusive property of CXT Incorporated. The information may only be used by the original recipient for the purpose intended. Reproduction or distribution of this information is strictly prohibited without the prior written consent of CXT Incorporated. By allowing use of this information, CXT Incorporated grants no warranty, express or implied, including a warranty of merchantability or of fitness for a particular purpose.

CXT Incorporated

REV.	DESCRIPTION	APPROVAL	DATE
SCALE	1/4"=1'-0"	DATE	10-31-16
DRAWN	ROB D WALKER	FILE NO.	16-376P
CHECKED	RDW	PLOT	48

BUILDING ELEVATIONS

DWG NO.	SHEET	REV.
DNS-04	2	

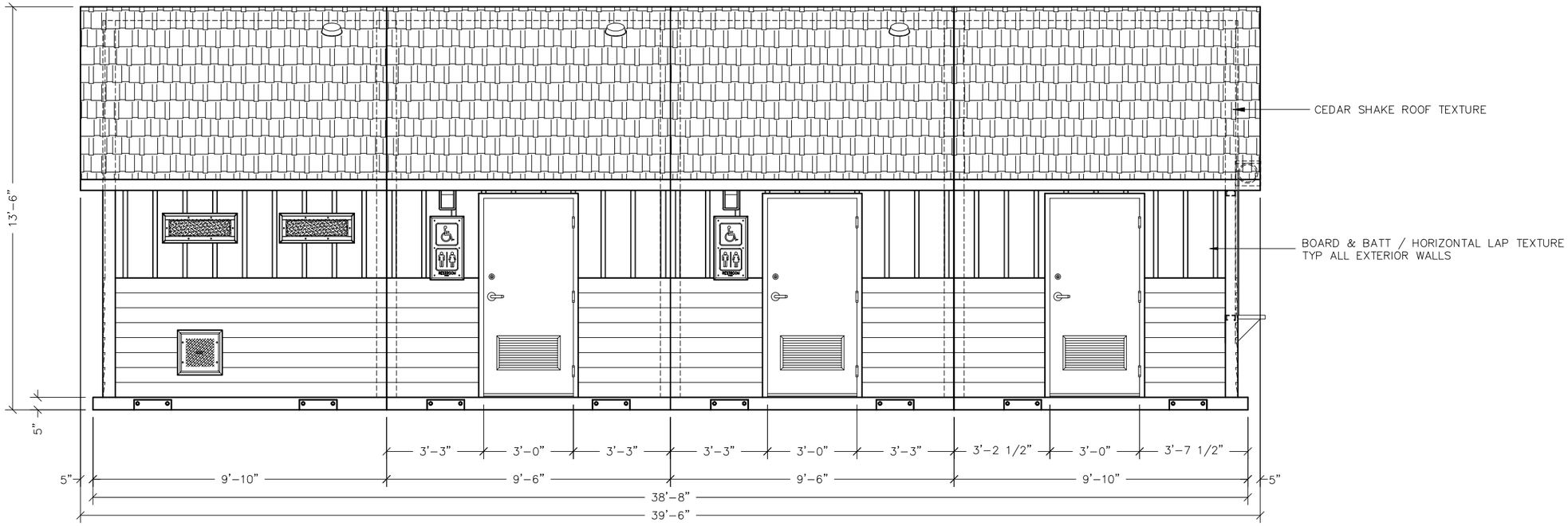

RIGHT SIDE ELEVATION

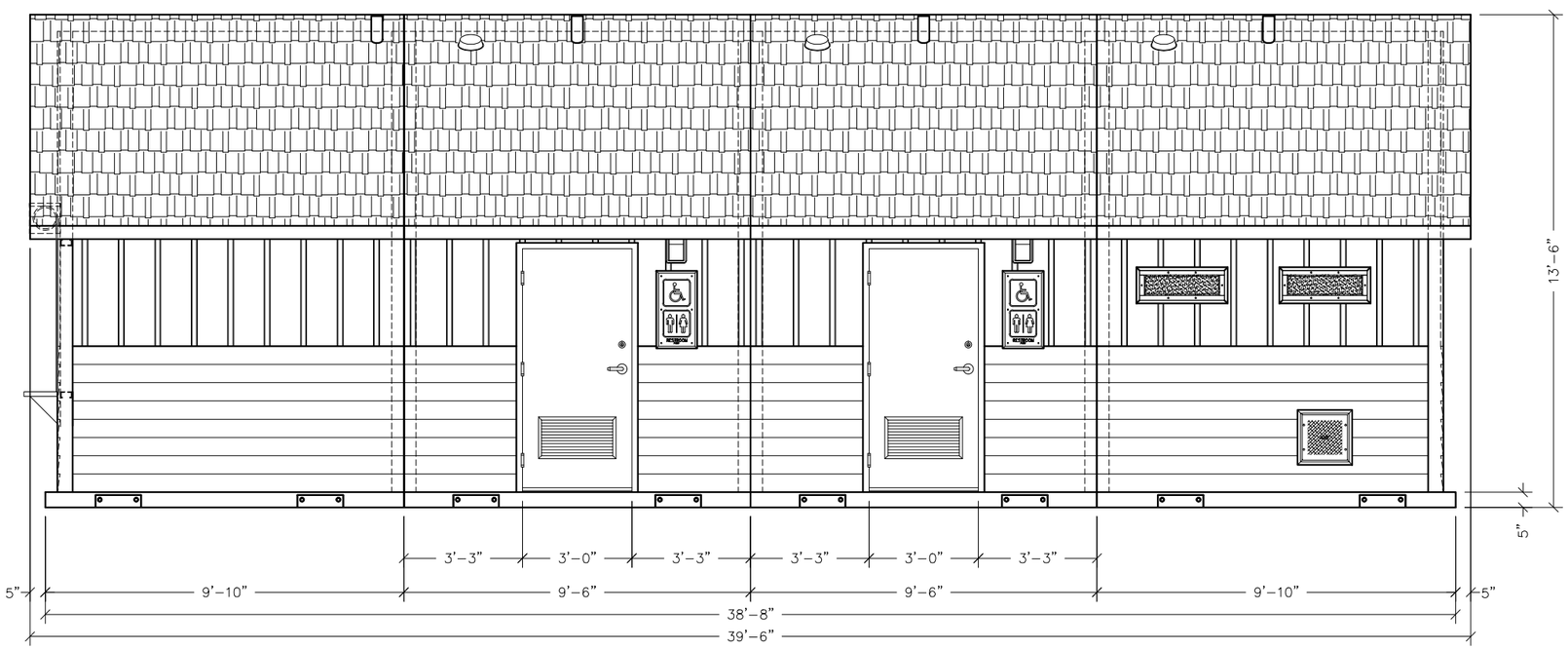

LEFT SIDE ELEVATION

3808 N. Sullivan Bldg. #7 Spokane, WA 99216

Precast Products

901 N. Highway 77 Hillsboro, TX 76645

PROJECT TITLE

DENALI SECTIONAL

PROPOSAL NUMBER 16-377P

NOTICE

The information contained herein is proprietary and the exclusive property of CXT Incorporated. The information may only be used by the original recipient for the purpose intended. Reproduction or distribution of this information is strictly prohibited without the prior written consent of CXT Incorporated. By allowing use of this information, CXT Incorporated grants no warranty, express or implied, including a warranty of merchantability or of fitness for a particular purpose.

CXT Incorporated

REV.	DESCRIPTION	APPROVAL	DATE
SCALE	1/4"=1'-0"	DATE	10-31-16
DRAWN	ROB D WALKER	FILE NO.	16-377P
CHECKED	RDW	PLOT	48

BUILDING ELEVATIONS

DWG NO.	SHEET	REV.
DNS-05	5	

BUILDINGS SHIPPED READY TO USE

Quick and easy to place.

Larger buildings come in 2 sections.

GSA Schedule Contract GS-07F-0502N

NJPA AWARDED CONTRACT Contract #022113-CXT

LBFoster
CXT® Concrete Buildings

CXT Incorporated An L.B. Foster Company
Spokane Industrial Park 3808 N. Sullivan Road Bldg. #7 Spokane, WA 99216
Telephone 509-921-8766 Fax 509-928-8270 Toll Free 800-696-5766 www.cxtinc.com

MIX Paper FSC FSC® C103525

GREEN BUILDINGS

CONCRETE BUILDINGS

CXT® Concrete Buildings

TOUGH AS MOTHER NATURE

Stand up to the mood swings of vandals and Mother Nature. CXT buildings are made with 4 inch thick steel-reinforced concrete walls and 5 inch thick steel-reinforced concrete roof and floors, along with the most tamper resistant components available. Designs allow for easy maintenance, and stand up to the toughest of environments. CXT can provide you with standard floor plans or custom designs to meet your site needs. All buildings are shipped ready to use with minimal site construction requirements. Check out why CXT is the leader in concrete buildings.

CXT® Concrete Buildings

LBFoster

Eric Kuester
Senior Sales Manager,
North West Territory

3808 N. Sullivan Bld # 7
Spokane, WA 99216

Phone 800.696.5766 x3255
Mobile 509.994.9900 Fax 509.928.8270
email: ekuester@lbfoster.com
www.cxtinc.com

October 28, 2017

Re: Request for contingency funds for the Haller Restroom and Community Activity Shelter Project.

Snohomish County Human Services

Office of Housing & Community Development

C/O Dee White -Housing, Public Facilities and Infrastructure Program Manager/NEPA Specialist

The original project consisted of a 1296 S.F. structure which included ADA accessible restrooms, a concession/mixed use area and a covered community activity shelter. The total cost of the facility was estimated at $284,623.00. This cost was estimated utilizing the 2014 IBC Square Foot Cost Calculator at a Square Foot cost of $118.80 .

The City of Arlington originally applied for Community Development Block Grant (CDBG) funds in 2014 in the amount of $284,623.00, during review of the application it was determined that CDBG funds could fund only the replacement of the non-ADA restroom portion of the project in the amount of $158,473.00. The City of Arlington dedicated $50,000.00 in REET funds to be applied to the project and Snohomish County Parks obligated $50,000.00 in funding, via an Interlocal Agreement (ILA) with the City, to be applied to the project. The City's in-kind costs were in the amount of $26,150.00, providing enough funds to complete the project

Award of $158,473.00 in CDBG funds occurred in May 2015, Contract Number HCS-15-21-1501-216.

The project went to bid on March 29, 2016 and One (1) bid was received in the amount of $499,250.00 which was in excess of the estimated amount and available funding by ($214,627.00.). The bid was rejected and the City planned to rebid the project in September 2016. In July 2016, Snohomish County Parks informed the City that the ILA could not be extended to accommodate the later project date and would be terminated and the $50,000.00 originally obligated for the Haller Project would not be available.

The City rebid the project September 27, 2016, in anticipation that there may be some favorable bids submitted to offset the loss of the County's $50,000.00 .This did not occur, Three (3) bids were received ranging from $387,286.00 (128,813.00), 479,400.00 (220,927.00), and $532,784.00 (274,311.00). The outcome of the second effort to bid this project leaves the City no other option but to seek other means instead of a site built structure, to fulfill the need of an ADA accessible restroom facility at the Haller Park site.

The City of Arlington is proposing to purchase a precast concrete restroom and concession structure to address the necessity of the restroom facilities for the park, with the Community Activity Shelter being constructed in the future as additional funding becomes available.

CXT Incorporated, manufactures precast concrete buildings that are fully equipped (turnkey) with all plumbing /w fixtures, electrical/w lighting and heat installed, ready to be placed on the owners level pad

with only the completion of utility connections to be operational. CXT Incorporated, is under state contract –Contract # 00213, thus eliminating the need for a competitive bid process. The company states that the delivery time is 90 days from date of ordering.

The building the City is planning to purchase consists of 6 "family style" gender neutral, ADA restrooms which meet criteria for CDBG funding. The total square footage for the restroom facilities is 487 S.F. at a cost of $196,546. The building will also include a 157 S.F. concession area, to be paid for with local funds at a cost of $60,624.00.There is also a WA State Management Fee for contract management in the amount of .0074% X total cost ($1,878.49) that the City is incurring in full.

The total cost of the restroom only unit is $196,546.00. Sidewalk installation and Electrical connection are $10,000.00. The original request of CDBG funds was in the amount of $158,473.00, this creates a shortfall of available funds in the amount of $48,079.00.

Because of this shortfall, the City of Arlington is requesting $38,463. in contingency funds from CDBG which is the gap in funds to complete the Haller Restroom project with the available funding sources. The city will however, need to eliminate the planned meeting area and postpone the construction of the Community Activity Shelter until such time that funding is available to complete the shelter portion of the project. The City has dedicated $50,000. in REET funds for the project. RCO funding is not an option as the application period has been closed since spring. The loss of the $50,000. from Snohomish County Parks created a significant financial burden for the project which places an even greater demand on REET funds, the City's only available funding source for this project. Without the contingency funds, the City will be faced with postponing the project, forfeiting the CDBG funds and re-applying for funding at a later date to construct. The option presented within this request for contingency funds is truly Arlington's last available chance to install restrooms at Haller Park until other funding sources are identified sometime in the future.

Total Cost of Haller Restroom Project	$ 289,632.49
Cost of Modules	$259,048.49
Electrical Connection	$ 5,000.
Site Work	$ 5,000.
Architect	$ 11,884.
Bid Expenses	$ 700.
Building Pad/Utilities	$ 8,000.
	$289,632.49
City	$83,080.96
CDBG	$158,473.
	$241,553.96
Shortfall	$ 48,078.53
Proposed Split to Address Gap in Funding	
CDBG Contingency Funds	$ 38,463.
Additional City Funds	$ 9,616.

Thank you in advance for your consideration of the request for CDBG contingency funds in order to complete the proposed project. We believe that Arlington has conducted due diligence in trying to make this project succeed, but there were elements not within our control that have caused this funding shortfall and places us in the position to request additional funding.

Best Regards,

Marc Hayes

Marc Hayes | Permit Center Manager | 360.403.3457
City of Arlington, Washington